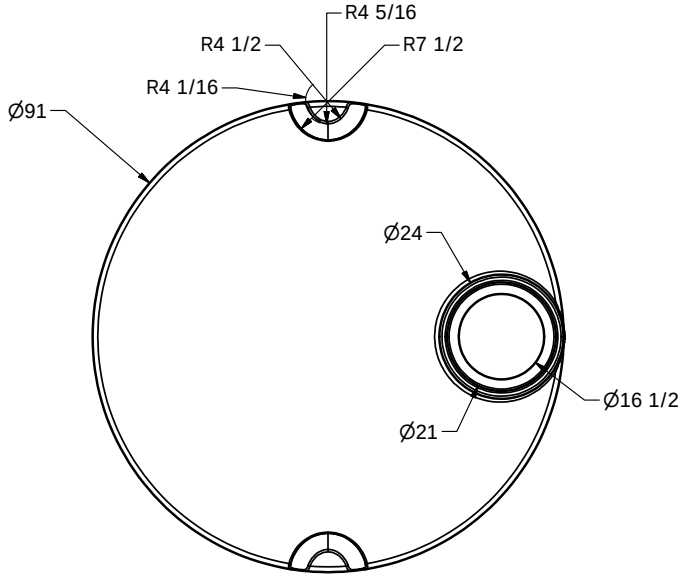

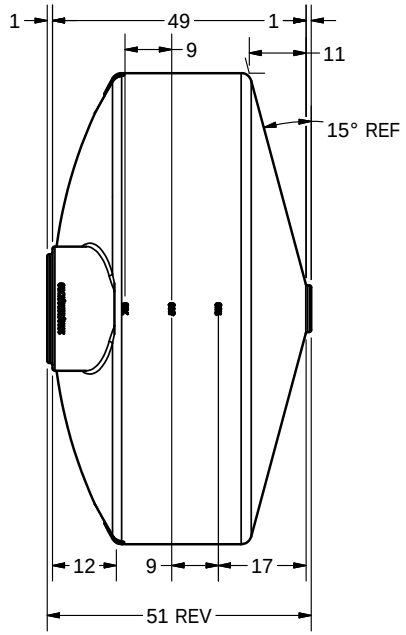

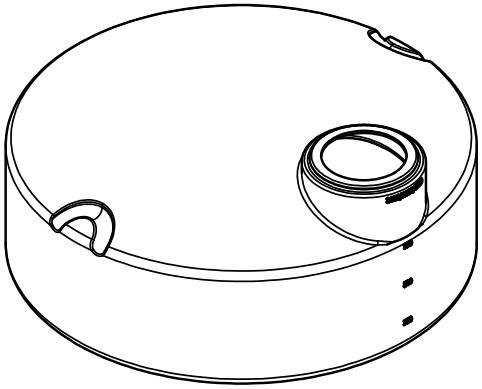

DRAWN Jerry Paulson	8/27/2014	NORWESCO, INC. SAINT BONIFACIUS, MN
CHECKED		TITLE
QA		1020 GALLON CONE BOTTOM TANK X 91 DIA X 15 DEG
MFG		
APPROVED		SIZE B / DWG NO / REV
		SCALE: 1/24 / SHEET 1 OF 1